450-43LE (Aisin Seiki)

RWD 4 Speed

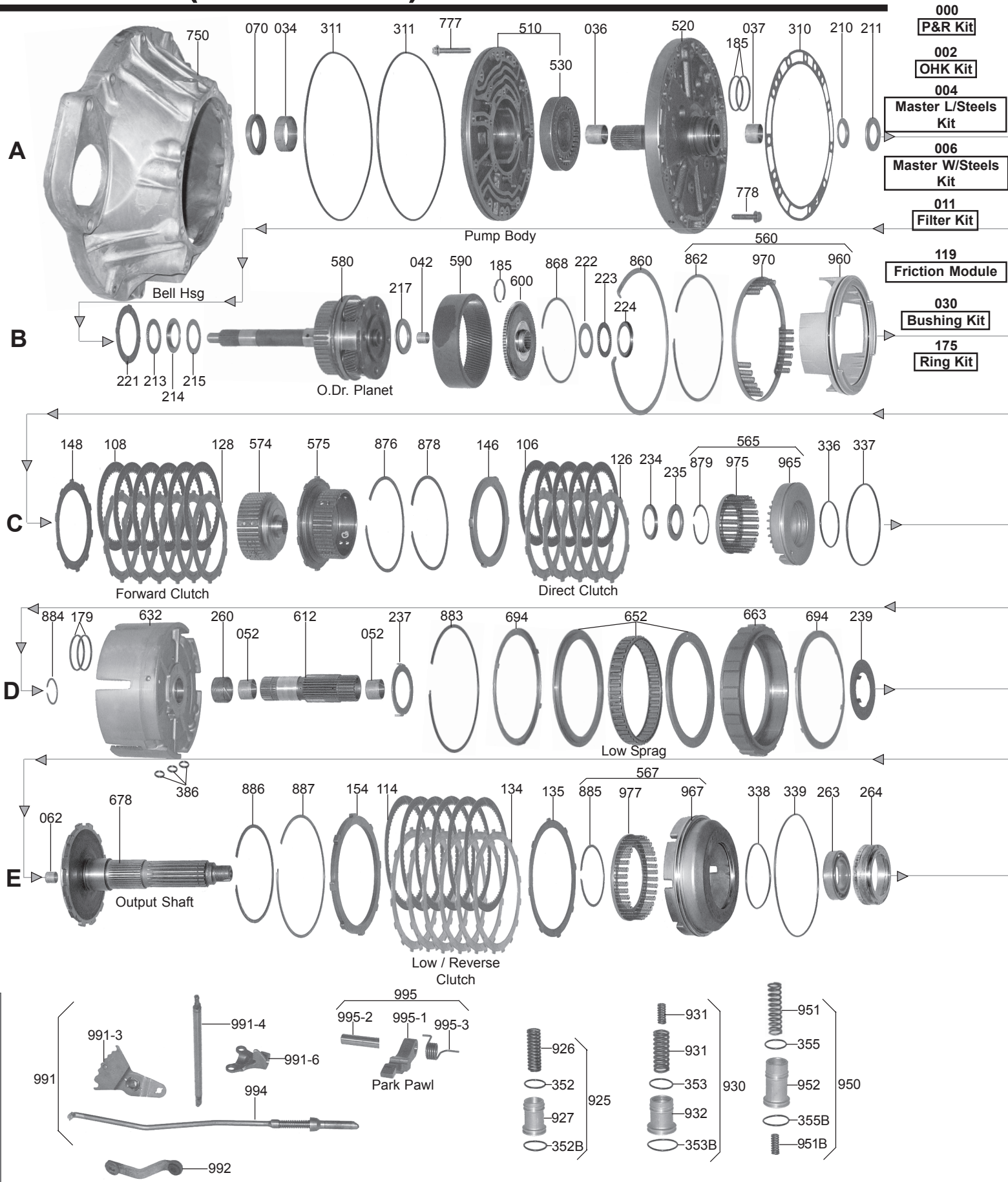

© WIT

450-43LE (Aisin Seiki)

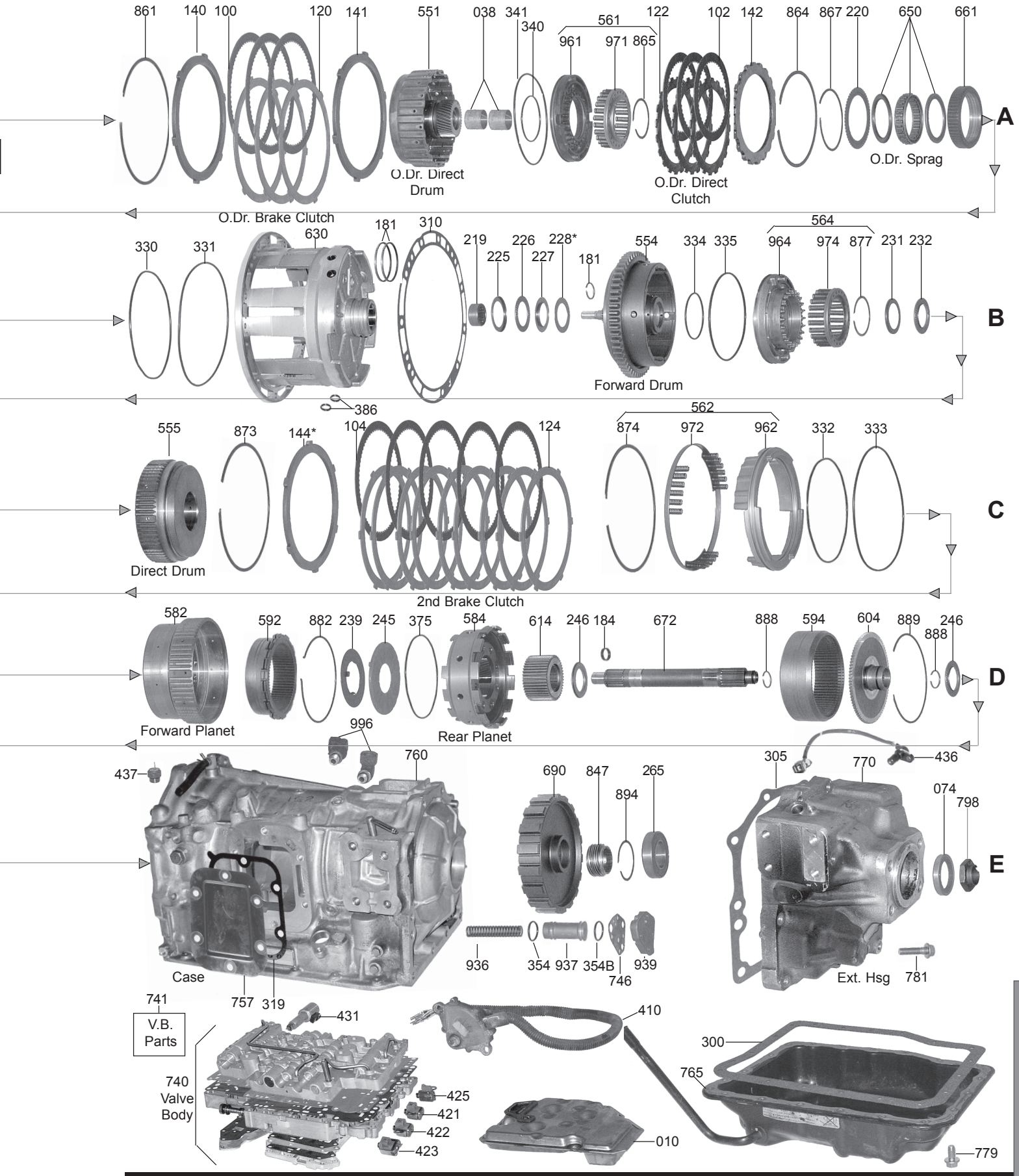

© WIT