AODE / 4R70W / 4R75W / 4R70E / 4R75E RWD 4 Speed

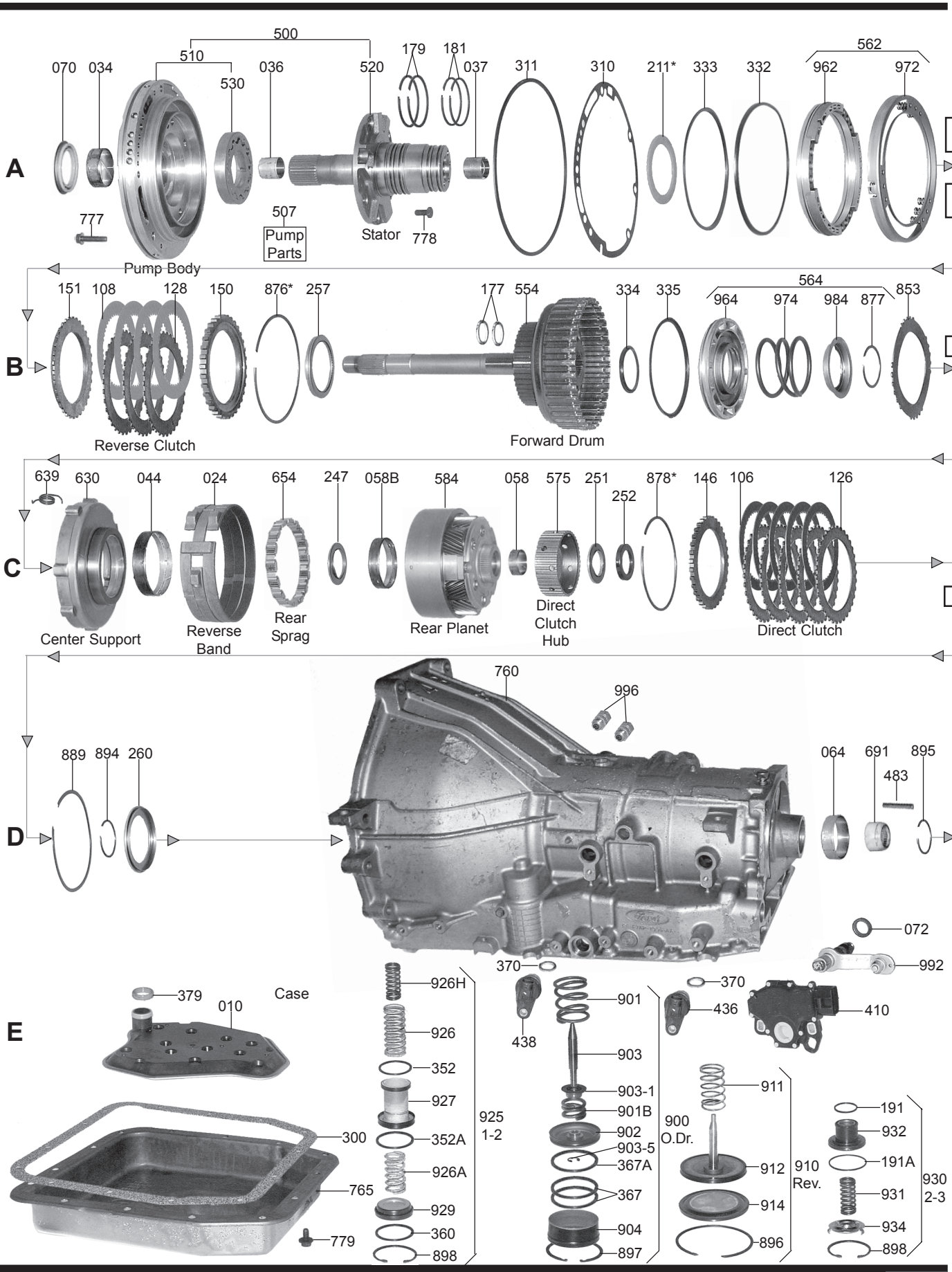

000 P&R Kit
002 OHK Kit
004 Master L/Steels Kit
006 Master W/Steels Kit
011 Filter Kit
030 Bushing Kit
119 Friction Module
139 Steel Module
165 V.B. Kit
175 Ring Kit
200 Washer Kit
390 External Seal Kit
400 Tech Manual

FORD

© WIT

AODE / 4R70W / 4R75W / 4R70E / 4R75E

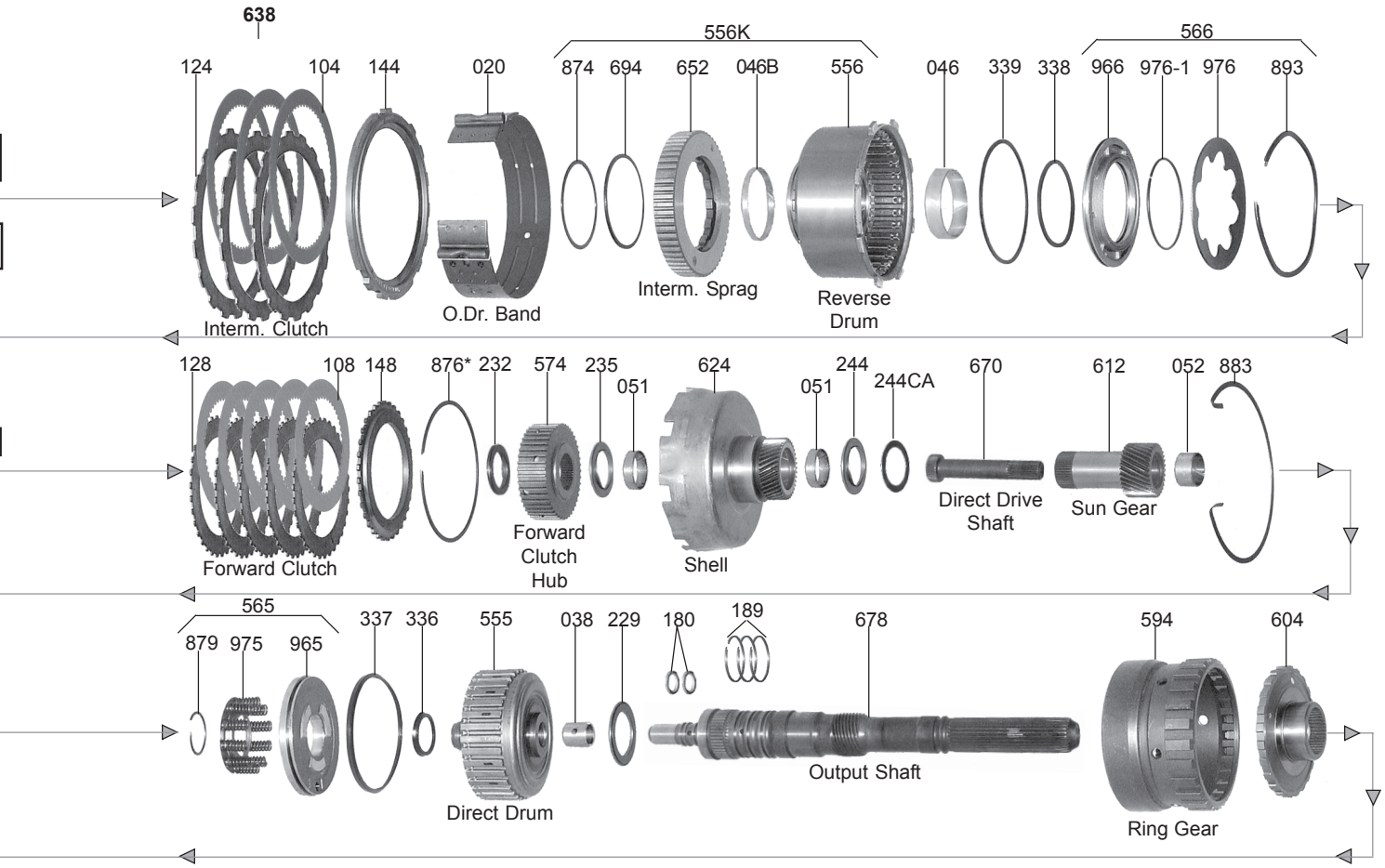

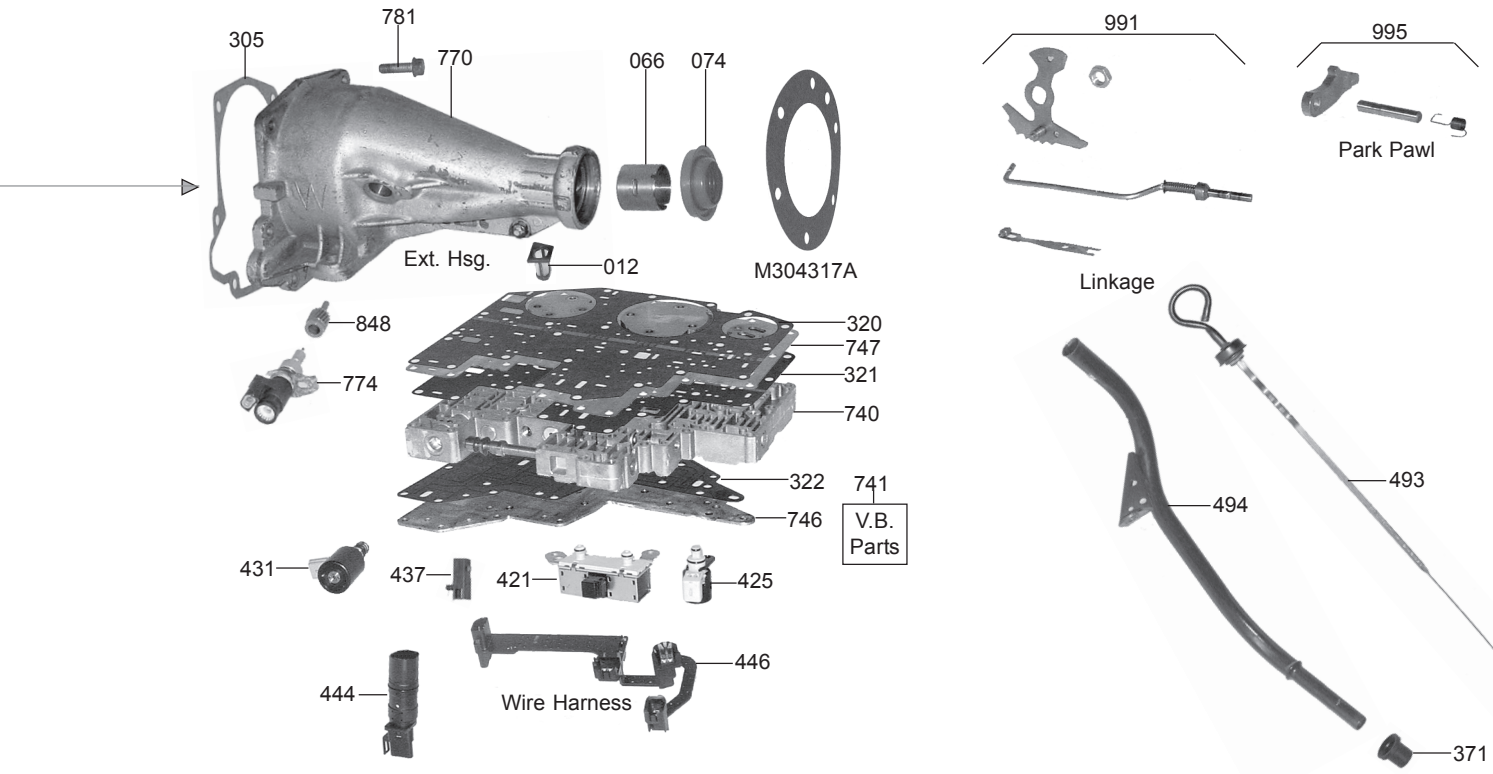

© WIT

Ganzeboom Transmission Parts & Torque converters