# AX4N / 4F50N

FWD 4 Speed

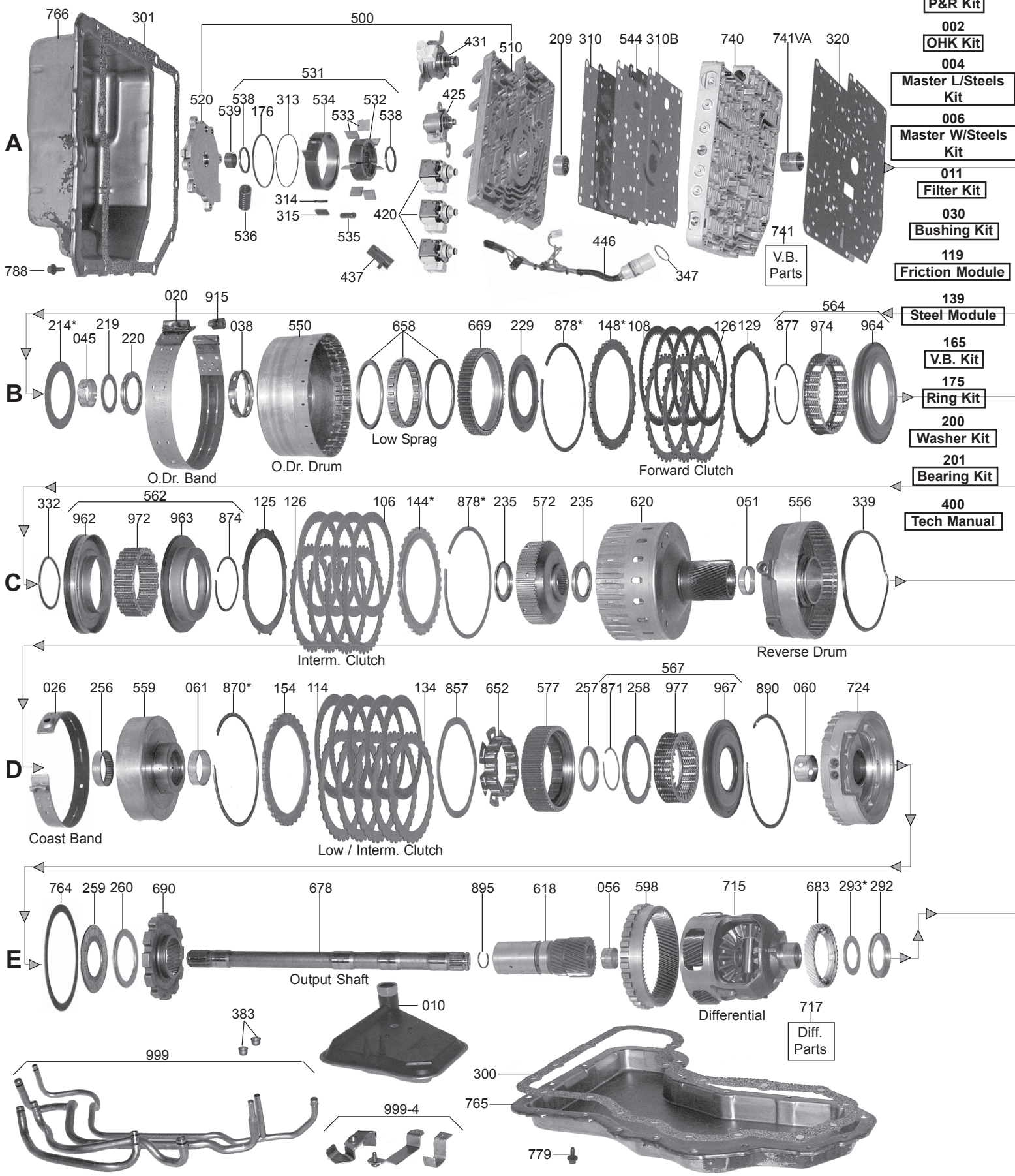


000 P&R Kit
002 OHK Kit
004 Master L/Steels Kit
006 Master W/Steels Kit
011 Filter Kit
030 Bushing Kit
119 Friction Module
139 Steel Module
165 V.B. Kit
175 Ring Kit
200 Washer Kit
201 Bearing Kit
400 Tech Manual

FORD

© WIT

# AX4N / 4F50N

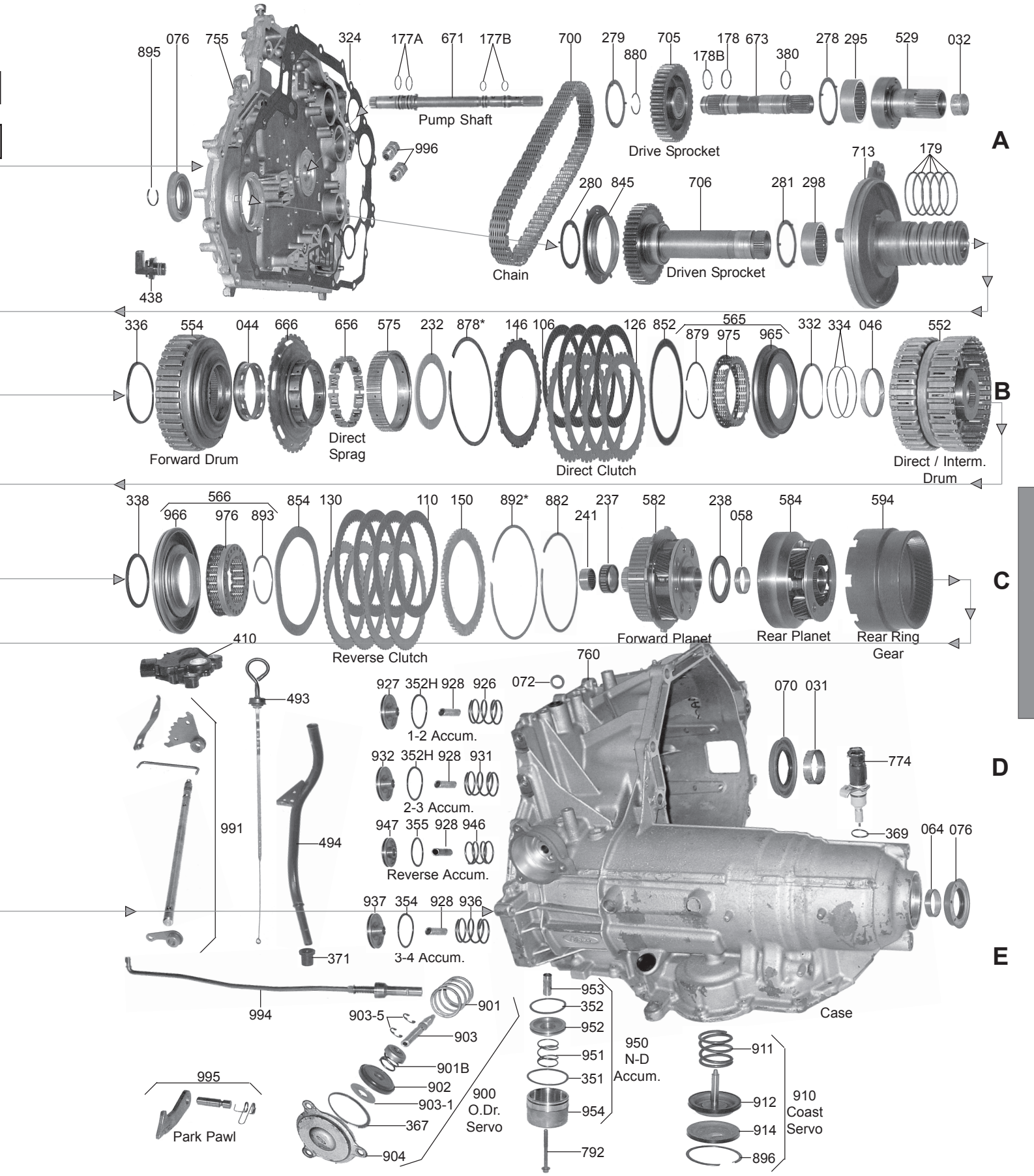




© WIT



Ganzeboom Transmission Parts & Torque converters